MOISTURE MEASUREMENT ANALYZER INTERFACE
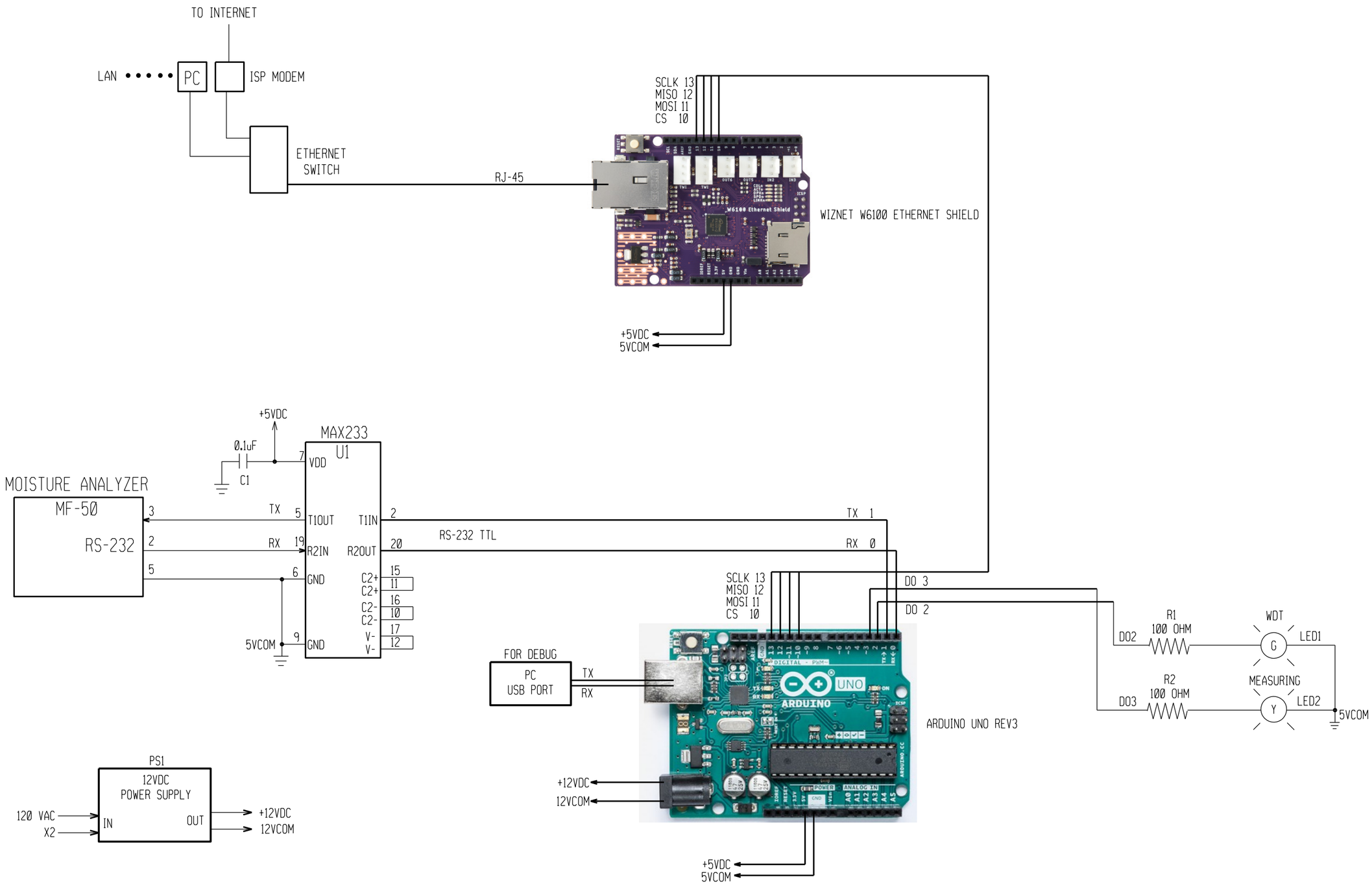
ABEtronics
V1.00 5-17-19