DRAWING NO. 008 HVAC3

FRONT OFFICE - HVAC REHEAT ZONES STEAM/WATER PIPING LAYOUT

ON/OFF MODES: [ ] MAN SELECT MODE

RH LOOP
PV: T-RH
SP: BASED ON OA (120-180)
OUT: CV-RH (% CLOSED)

CV-RH
REGULATED OUTPUT: 0-100% = 0-15PSI
100% = NO HEAT (15 PSI)
0% = MAX HEAT (0 PSI)

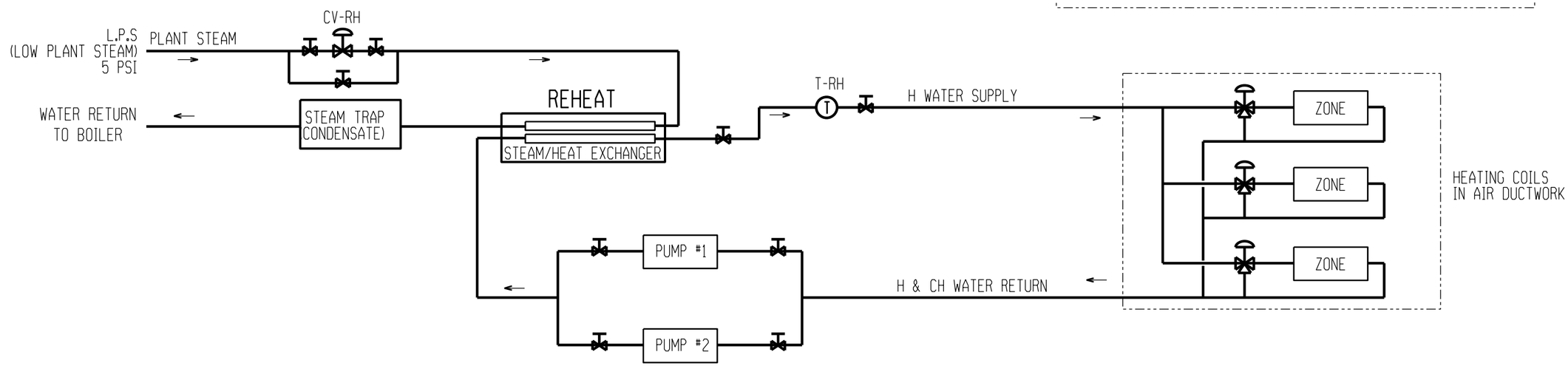

REHEATING MODE: (CONTROL STEAM FLOW)
1. T-RH: MAINTAIN BETWEEN 120 TO 180 DEGF:
   - OUTSIDE TEMP => 60 DEGF, T-RH = 120 DEGF.
   - OUTSIDE TEMP < 60 DEGF, T-RH = 180 DEGF.
   T-OA=60 (30 to 60)
   T-RH=120 =120-((-60 x ((60-T-OA)/30)))
   NOTE: =<30=180, 40=160, 50=140, =>60=120
2. CV-RH: 0-100%, SEND STEAM TO HEAT EXCHANGERS.

T-RH: REHEAT WATER TEMPERATURE

CV-RH: REHEAT EXCHANGER

NOTES:
1. MANUALLY TURN ON PUMPS.

DATE PLOTTED $$$$DATE$$$

REFERENCE DRAWINGS

DWG. NO.	TITLE	DWG. NO.	TITLE
008 468100 -	MASTER DRAWING LIST	-	
-		-	

SUBJECT INDEX 008 - 00 - E - 76 - 5400
WORKS NO. LINE NO. DISCIPLINE OPERABLE UNIT ITEM NO.

DO NOT SCALE THIS PRINT

THIS PRINT SUPERSEDES ALL PRINTS PRIOR TO REVISION

REV.	BY	DATE

DRAWN BY JFA DATE 7-11-16
CHECKED DATE
APPROVED DATE
FRAME NO.

MEADVILLE, PA
FRONT OFFICE
HVAC SYSTEM - REHEAT
STEAM/WATER PIPING LAYOUT

SCALE NONE
DRAWING NO. 008 HVAC3

FORM 491 REV. 2-84